series 2400

ELECTRIC DRIVEN INJECTION PUMP

PRODUCT FEATURES

- Maximum discharge pressure: 4,000 PSI (276 bar) w/ 1/2” plunger
- Maximum volume: 880 GPD (3,331 Liters) w/ 1-1/4” plunger
- Each fluid end is adjustable while running Simplex or Duplex configuration
- Available in 2 stroke rates: 30 or 60 strokes/minute
- 1 Horsepower motor is standard (2 hp optional) 1 or 3 phase-TEFC or Explosion Proof
- Oil-less Drive Unit
- Plunger Sizes: 1/2”, 3/4”, 1”, 1-1/4”

MODEL DESIGNATION

24F6 – 2

Number of Heads
1 – Simplex

Plunger Size
5 – 1/2”
6 – 3/4”
7 – 1”
8 – 1-1/4”

Stroke Speed
F – 60 SPM
G – 30 SPM

2400 Series

The 2400 Series chemical injection pumps are electric driven, positive displacement pumps utilizing C-faced motors and common gear reducers. The gear reducers are available in 30 or 60 strokes per minute. Four different plunger sizes provide a wide selection of volumes and pressures.

The 2400 Series is available in Simplex or Duplex configurations. They are adjustable while running and each are driven off an eccentric cam gear which requires no oil bath.

2400 Pump Assembly - Duplex

Item	B/P No.	No. Reqd.	Name	Material
1	TC-2150	2	Cover	ASTM A48 C.I.
2	P86-025075-0200	8	Thumb Screw	Cad. Pl. Steel
3	TB-1647	2	Gasket Cover	Nitrile
4	TD-0528	2	Housing	ASTM A48 C.I.
5	P01-050150-0200	4	HHCS 1/2-13x1.50	Cad. Pl. Steel
6	P25-050000-0200	4	Nut, Hex 1/2-13	Cad. Pl. Steel
7	P52-050000-0200	4	Cut Washer 1/2	Cad. Pl. Steel
8	TC-2165	1	Base Plate	Galv. Steel
9		2	Assembly F/E	316 SS
10	TA-6474	2	Cross Head Bearing Long	Rulon
11	TA-6473	2	Cross Head Bearing Short	Rulon
12	TA-5966	2	Screen	SS
13	TC-2152	2	Cross Head Assembly	17-4PH. SS
14	TB-1646	2	Eccentric Cam Assembly	Steel
15	TA-6470	2	Key	Carbon Steel
16	TA-6476	2	Shaft Bearing Small	Rulon
17	TB-1648	1	Reducer 30 SPM	
	TB-1649	1	Reducer 60 SPM	
	TB-1650	1	Reducer 120 SPM	
18	TA-6471	2	Stroke Adjustor	17-4PH. SS
19	TA-6477	2	Adjusting Screw	416 SS
20	TA-5953	2	Drive Clip	Steel
21	TA-6495	1	Motor (IHP-EXP Proof)	
22	TA-6475	2	Shaft Bearing Large	Rulan
23	TC-2172	1	Drive Shaft	4140
24	P01-037150-4400	8	HHCS	SST
25	P01-037150-0200	8	HHCS	SST
26	P25-037000-0200	8	Hex Nut	SST
27	P52-037000-0200	8	Lock Washer	Steel
28	P55-037000-0200	8	Flat Washer	Steel

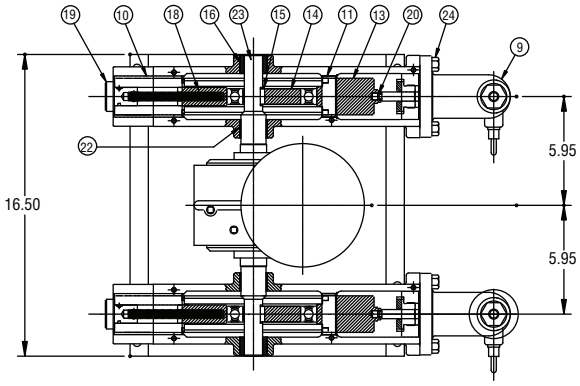

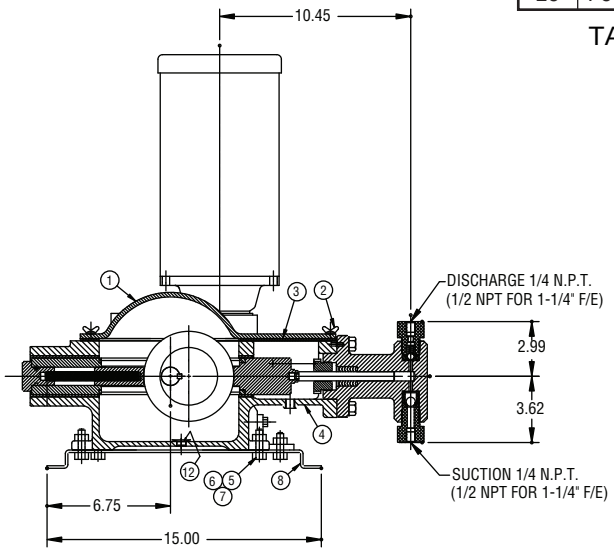

TA6494 - GEAR REDUCER KEY FOR IN DRIVE SHAFT

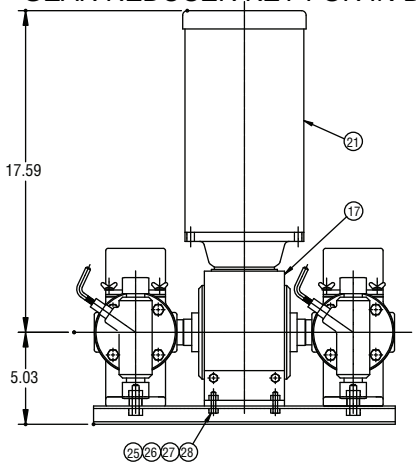

2400 PUMP
FLUID END PARTS LIST

Item	Description	Material	Fluid End Sizes			
			1/2"	3/4"	1"	1-1/4"
1	Fluid End Assy	316 ss	TC 2162	TC 2146	TC 2147	TC 2148
	Pump Head	303 ss	TC 2158	TC 2142	TC 2143	TC 2145
2	Discharge Bushing	303 ss	TA 0152	TA 0152	TA 0152	TA 2456
3	Suction Bushing	303 ss	TA 0153	TA 0153	TA 0153	TA 2455
4	Discharge Check Valve Seat	303 ss	TB 0695	TB 0695	TB 0695	TB 0695
5*	Suctlon Check Valve Seat	316 ss	TB 0698	TB 0698	TB 0698	TB 0698
6	Discharge Check Ball	316 ss	TA 0054	TA 0054	TA 0054	TA 0054
7	Suctlon Check Ball	316 ss	TA 0053	TA 0053	TA 0053	TA 0053
8	Check Ball Spring	316 ss	TA 0077	TA 0077	TA 0077	TA 0077
9	Gasket	304 ss	TA 2350	TA 2350	TA 2350	TA 2350
10	Ball Cage	17-4ph ss	TA 0444	TA 0444	TA 0444	TA 0444
11	Packing (Buna-n)		TA 0959	TA 2771	TA 0050	TA 0405
	(Viton)		TA 4103	TA 4657	TA 4658	TA 4480
	(Teflon)		TA 1531	TA 2988	TA 1013	TA 1014
	(High Pressure-Buna)	TA 1874	TA 2772	TA 4135	TA 4133	
12	Packing Gland	303 ss	TA 1219	TA 2769	TA 0043	TA 6450
13	Packing Gland Nut	303 ss	TA 6484	TA 2765	TA 0047	TA 6451
14	Plunger	17-4ph ss	TA 6499	TA 6459	TA 6460	TA 6461
15	Discharge Check Valve Assy	SS/Buna	TB 0368-B	TB 0368-B	TB 0368-B	TB 0368-B
		SS/Viton	TB 0368-V	TB 0368-V	TB 0368-V	TB 0368-V
		SS/Teflon	TB 0368-T	TB 0368-T	TB 0368-T	TB 0368-T
16	Suction Check Valve Assy.	SS/Buna	TB 0698-B	TB 0698-B	TB 0698-B	TB 0698-B
		SS/Viton	TB 0698-V	TB 0698-V	TB 0698-V	TB 0698-V
		SS/Teflon	TB 0698-T	TB 0698-T	TB 0698-T	TB 0698-T
17	Bleeder Valve Assy.		TA 0123	TA 0123	TA 0123	TA 0123
18*	Discharge O-Ring (Buna-N)		TA 2097	TA 2097	TA 2097	TA 2097
	(Viton)		TA 2336	TA 2336	TA 2336	TA 2336
	(Teflon)		TA 6189	TA 6189	TA 6189	TA 6189
19*	Suction O-Ring (Buna-N)		TA 0612	TA 0612	TA 0612	TA 0612
	(Viton)		TA 2184	TA 2184	TA 2184	TA 2184
	(Teflon)		61439P007	61439P007	61439P007	61439P007
20	Gasket	304 ss	TA 2338	TA 2338	TA 2338	TA 2338

* These parts included in the Check Valve Assy. for the type of seals needed.

24F5 (1/2” Plgr)
CAPACITY FLOW CHART

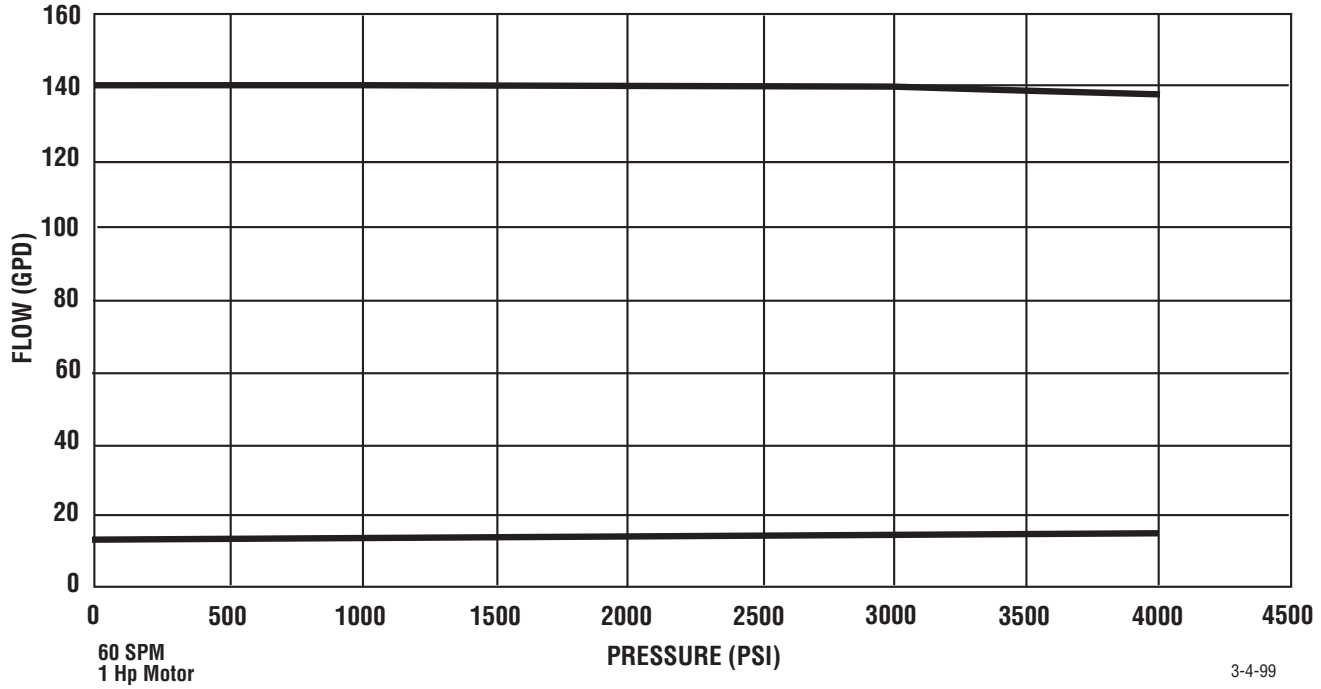

60 SPM
1 Hp Motor

3-4-99

24F6 (3/4” Plgr)
CAPACITY FLOW CHART

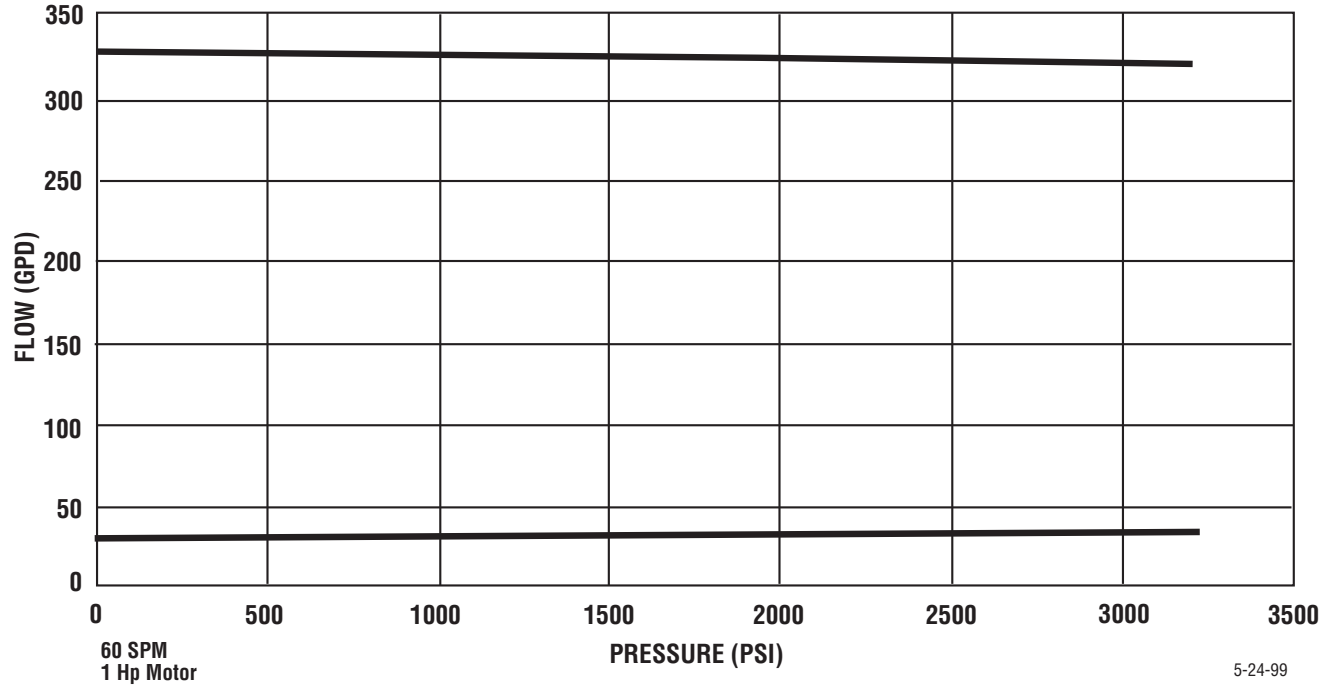

60 SPM
1 Hp Motor

5-24-99

24F7 (1” Plgr)
CAPACITY FLOW CHART

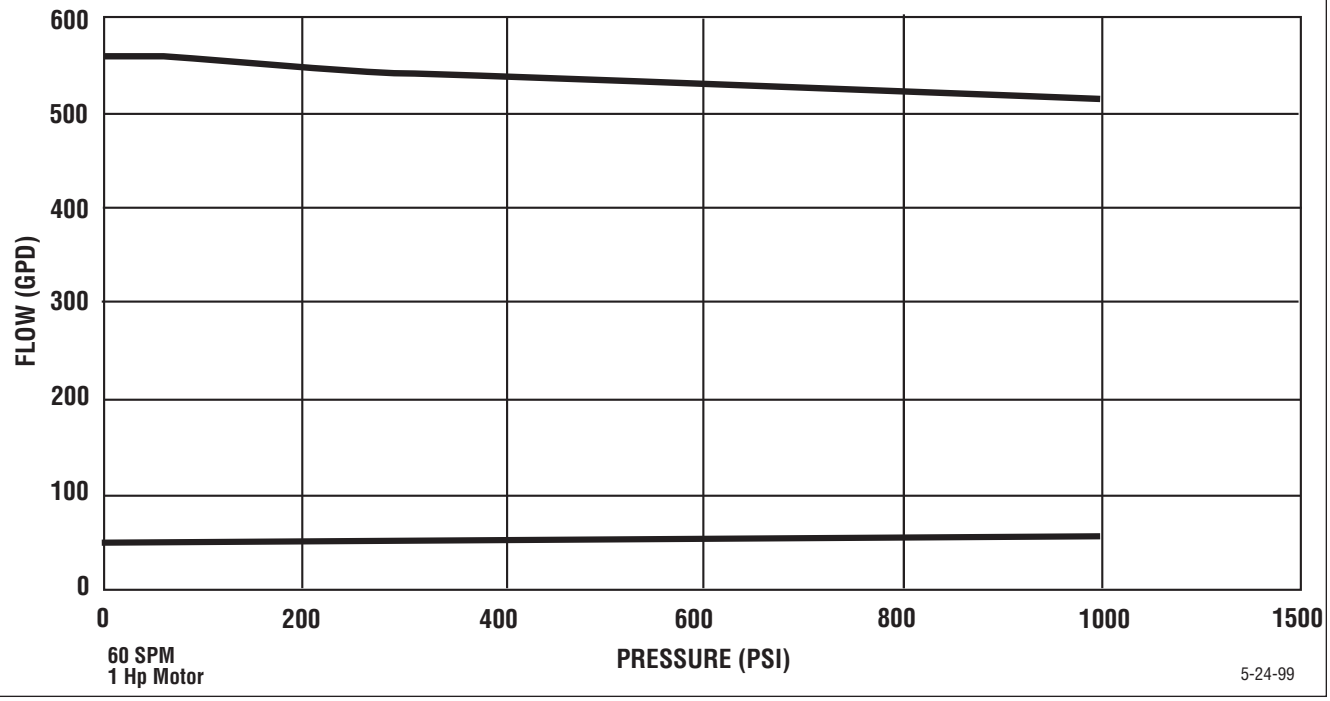

60 SPM
1 Hp Motor

5-24-99

24F8(1-1/4” Plgr)
CAPACITY FLOW CHART

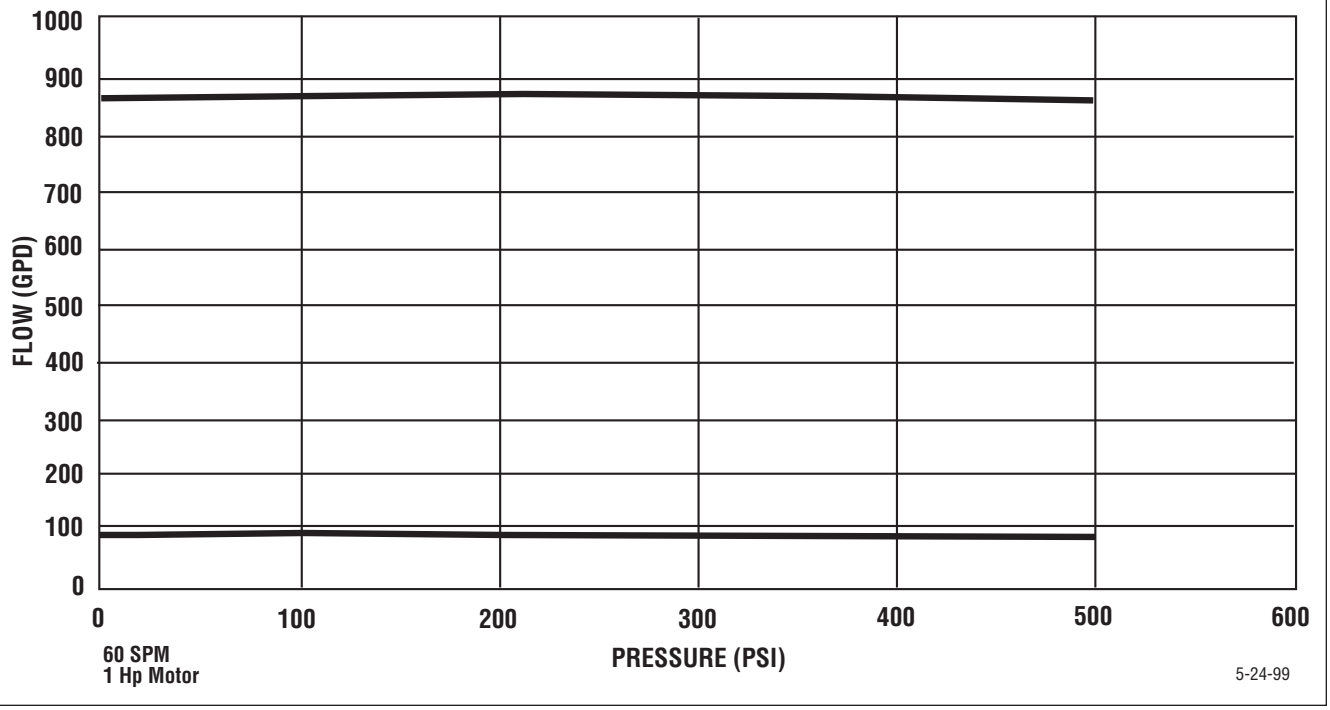

60 SPM
1 Hp Motor

5-24-99

24G5(1/2" Plgr)
CAPACITY FLOW CHART

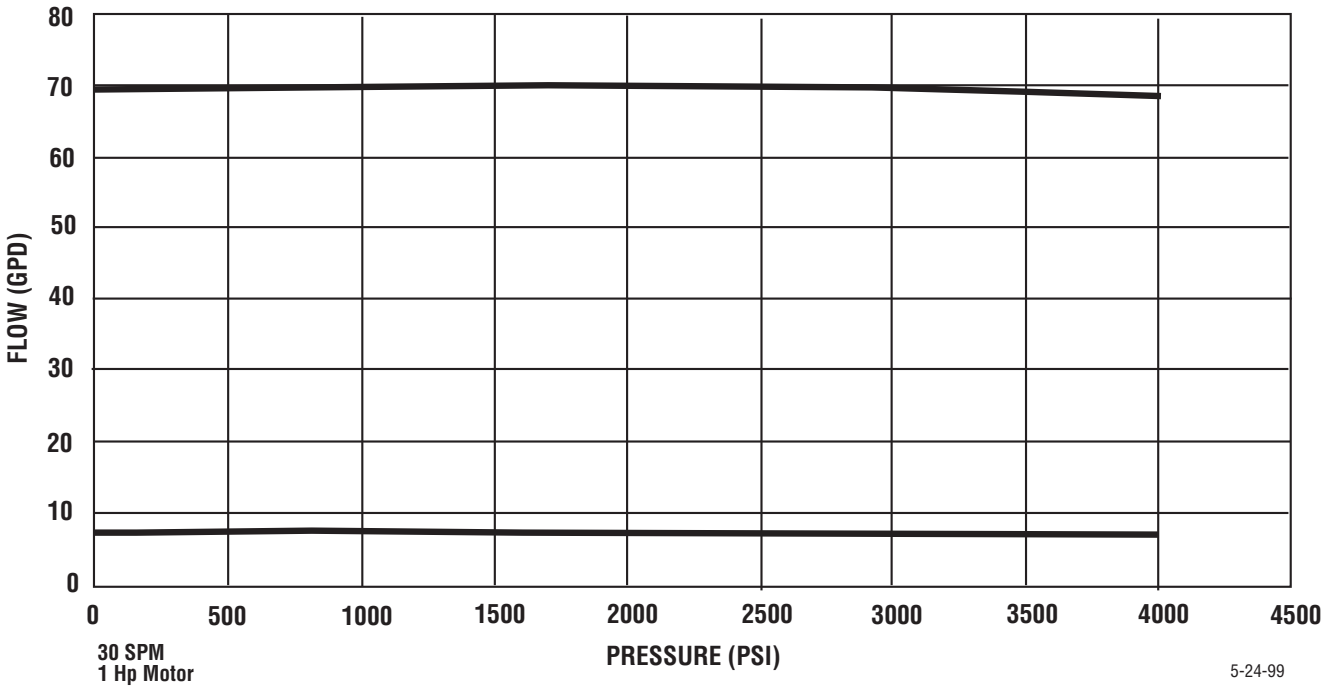

30 SPM
1 Hp Motor

5-24-99

24G6(3/4" Plgr)
CAPACITY FLOW CHART

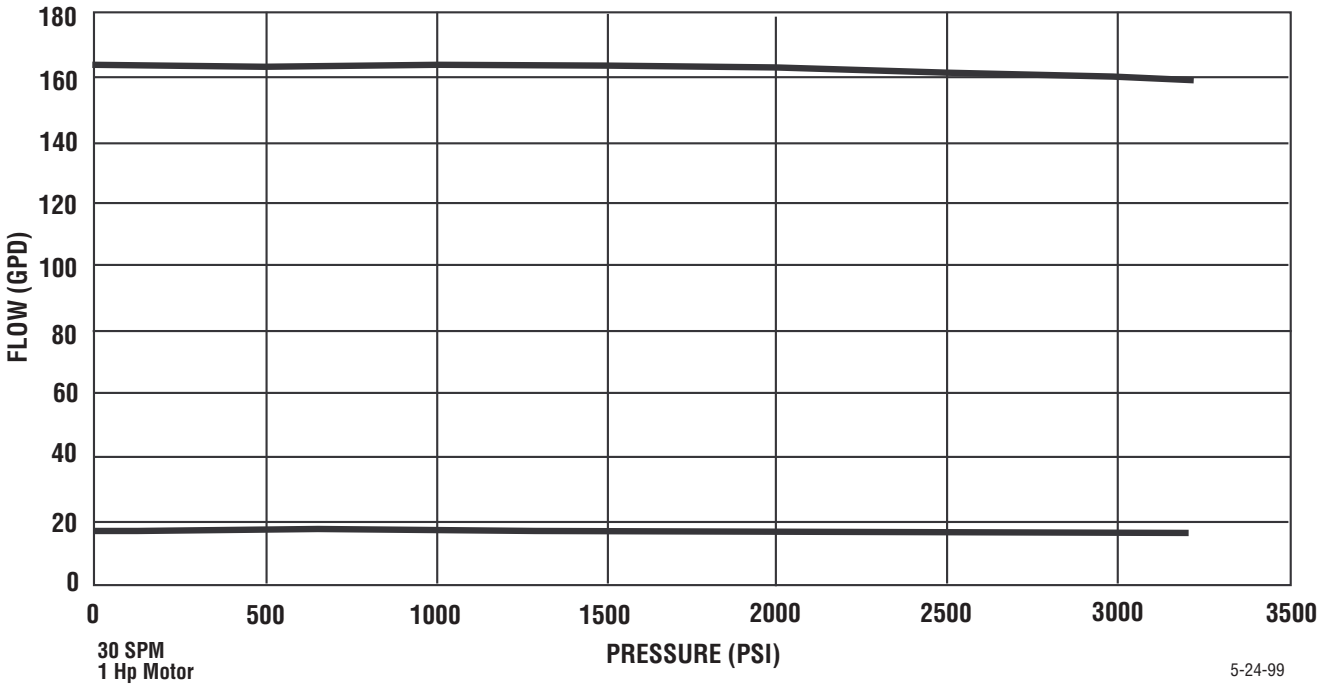

30 SPM
1 Hp Motor

5-24-99

24G7(1" Plgr)
CAPACITY FLOW CHART

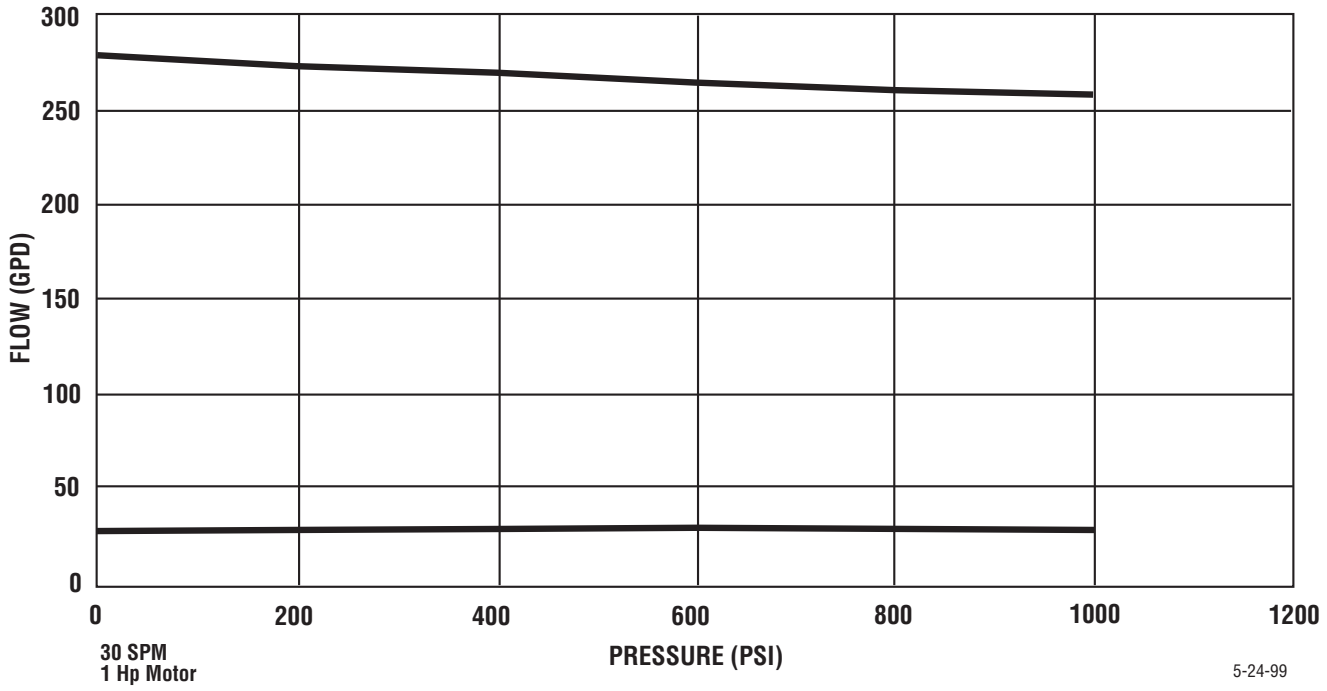

30 SPM
1 Hp Motor

5-24-99

24G8(1-1/4" Plgr)
CAPACITY FLOW CHART

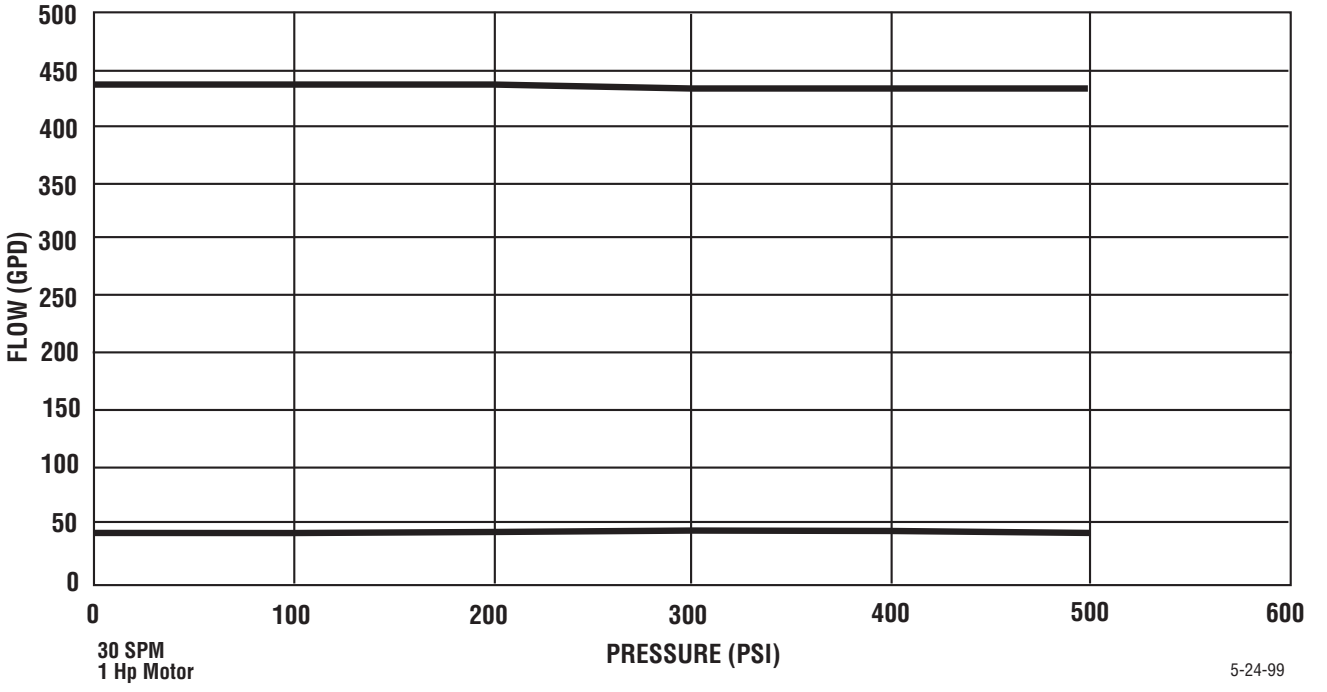

30 SPM
1 Hp Motor

5-24-99

INSTALLATION AND START-UP INSTRUCTIONS

INSTALLATION

Pump Location – An Important Factor

- Plan ahead for proper pump mounting-position it to provide for efficient routing of suction and discharge lines, as well as electric service
- Avoid long suction lines
- Provide for a flooded suction line whenever possible
- Pump fluid lines and connections operate best when there is a minimum restriction to the medium flow
- Install the proper electrical starters and disconnect switches
- It is recommended that a solid mounting support be provided – take advantage of the factory installed holes in the base plate for securing the pump

FLUID END

- All fluid connections, both suction and discharge, should be sealed tight. Fluid end connections are 1/2" NPT
- The suction connection is at the bottom of the fluid end, and the discharge connection is at the top.

MOTOR

- A conduit connection is provided at the motor for electrical connections.
- Assure the proper electrical service has been provided
- Assure all connections are tight, in their proper location, properly grounded, and fused

GEAR REDUCER

- Check the oil level of the gear reducer
- If the oil level is below the output shaft oil plug, refill to the plug Mobil Cylinder Oil 600W or Texaco Metropia 460
- For low temperature applications, use Mobil SHC 634

START UP

- Open the priming valve on the fluid end assembly
- Start the pump motor
- Allow the pump to run until a clear stream of media comes out of the priming valve
- Close the priming valve
- Check the packing for proper sealing. If it leaks, stop the pump and make the necessary adjustments.
- Adjust the stroke adjustment knob to obtain the desired flow rate.

PREVENTIVE MAINTENANCE

- Check periodically (minimum once a month) and apply a small amount of grease to the cam bearing and to the crosshead areas that cycle through the linear bearings.
- Check the packing regularly. If leakage is observed, stop the pump. Make a small adjustment by turning the gland nut. Restart the pump. (Do not over-tighten the packing as this will reduce the packing life and possibly damage the plunger.

It is always important to assure the packing material is compatible with the media being pumped – check for swollen or deteriorated seals.

Texsteam Pumps
Dresser, Inc.
16240 Port Northwest Drive
Houston, Texas 77041-2645 USA
Ph: 832.590.2306 Fax: 713.849.2879
Toll Free Phone: 800.945.9898 Email: txtpumps@dresser.com

www.dresser.com

©2008 Dresser, Inc.
Texsteam and Dresser are registered trademark(s) of Dresser, Inc.

Series 2400
8.09